PIONEER
The future of sound and vision.

Service Manual

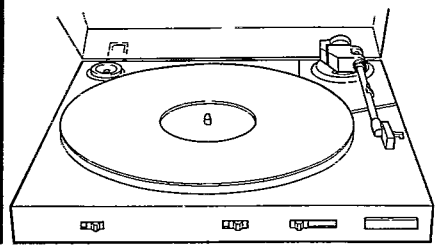

ORDER NO.
ARP1478

STEREO TURNTABLE

PL-Z91 ZEBM

PL-Z81 ZEBM

- This service manual is applicable to the PL-Z91/ZEBM and PL-Z81/ZEBM types.

CONTENTS

1. SPECIFICATIONS 2
2. PANEL FACILITIES 2
3. PACKING 3
4. DISASSEMBLY 4
5. EXPLODED VIEWS 6
6. SCHEMATIC DIAGRAM 12
7. P.C. BOARDS CONNECTION DIAGRAM 13
8. ELECTRICAL PARTS LIST 14
9. PRECAUTIONS FOR REASSEMBLY 15
10. ADJUSTMENTS 19
RÉGLAGE 21
AJUSTE 23

PIONEER ELECTRONIC CORPORATION 4-1, Meguro 1-Chome, Meguro-ku, Tokyo 153, Japan
PIONEER ELECTRONICS SERVICE INC. P.O. Box 1760, Long Beach, California 90801 U.S.A.
PIONEER ELECTRONICS OF CANADA, INC. 505 Cochrane Drive, Markham, Ontario L3R 8E3 Canada
PIONEER ELECTRONIC [EUROPE] N.V. Keetberglaan 1, 2740 Beveren, Belgium
PIONEER ELECTRONICS AUSTRALIA PTY. LTD. 178-184 Boundary Road, Braeside, Victoria 3195, Australia TEL: [03] 580-9911

MO © JAN. 1988 Printed in Japan

PLX-501, PLX-500

1. SPECIFICATION

Turntable section (PLX-501)

Motor ..... DC motor, direct drive
Speed ..... 33 1/3 rpm, 45 rpm
Wow and flutter ..... 0.15 % (WRMS)
Signal-to-noise ratio ..... 70 dB (DIN-B)
Starting torque ..... 1.5 kg·cm (20.8 oz·in)
Platter ..... 300 mm (11 13/16") diameter, 2.5 mm (3/32") thick

Tonearm

Effective length ..... 230 mm (9 1/16")

Cartridge (PLX-501)

Type ..... MM/IM
Stylus ..... Nude elliptical
Frequency response ..... 20 Hz – 20 kHz
Output voltage ..... 3.5 mV (1 kHz, 5 cm/s)
Channel balance ..... 1 dB (1 kHz)
Tracking force ..... 2.0 g

Power

Power requirements ..... 100 V, 120 V, 220 V, 230 V, 240 V AC
Power consumption ..... 15 W
Weight ..... 5.5 kg (12 lb 2 oz)

Accessories

Power cord 1
Instruction manual 1

Specifications are subject to change without notice for product improvement purposes.

2. PANEL FACILITIES

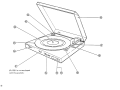

1 Only PLX-501 is equipped with a cartridge.

PACKING

6. EXPLODED VIEW

6-1 Cabin

- Before disassembling or assembling parts, be sure to carefully read the safety hints in this manual.
- When the direction is not specified, it should be assembled as it is mounted on the machine.
- Bolts and nuts denoted by the same symbol (e.g. ★) should be tightened with the same torque.
- Use the genuine parts listed below for replacement. Use of any other parts may result in malfunction or hazardous conditions which will void the warranty.

Parts List Products

No.	Part No.	Description
1	20Y-54-11111	Cabin assembly
2	20Y-54-11121	Cabin assembly
★ 3	01010-50816	Bolt
★ 4	01010-51040	Bolt
5	20Y-54-11130	Cabin
6	20Y-54-11140	Floor
7	20Y-54-11150	Floor
★ 8	01010-50816	Bolt
★ 9	01010-51040	Bolt
10	20Y-54-11160	Cover
11	20Y-54-11170	Cover
12	20Y-54-11180	Plate
13	20Y-54-11190	Plate
14	20Y-54-11200	Plate
15	20Y-54-11210	Plate
16	20Y-54-11220	Plate
17	20Y-54-11230	Plate
18	20Y-54-11240	Plate
19	20Y-54-11250	Plate
20	20Y-54-11260	Plate
21	20Y-54-11270	Plate
22	20Y-54-11280	Plate
23	20Y-54-11290	Plate
24	01010-50816	Bolt
25	01643-31645	Washer
26	20Y-54-11300	Plate
27	20Y-54-11310	Plate
28	20Y-54-11320	Plate
29	20Y-54-11330	Plate
30	20Y-54-11340	Plate

EXTERIOR

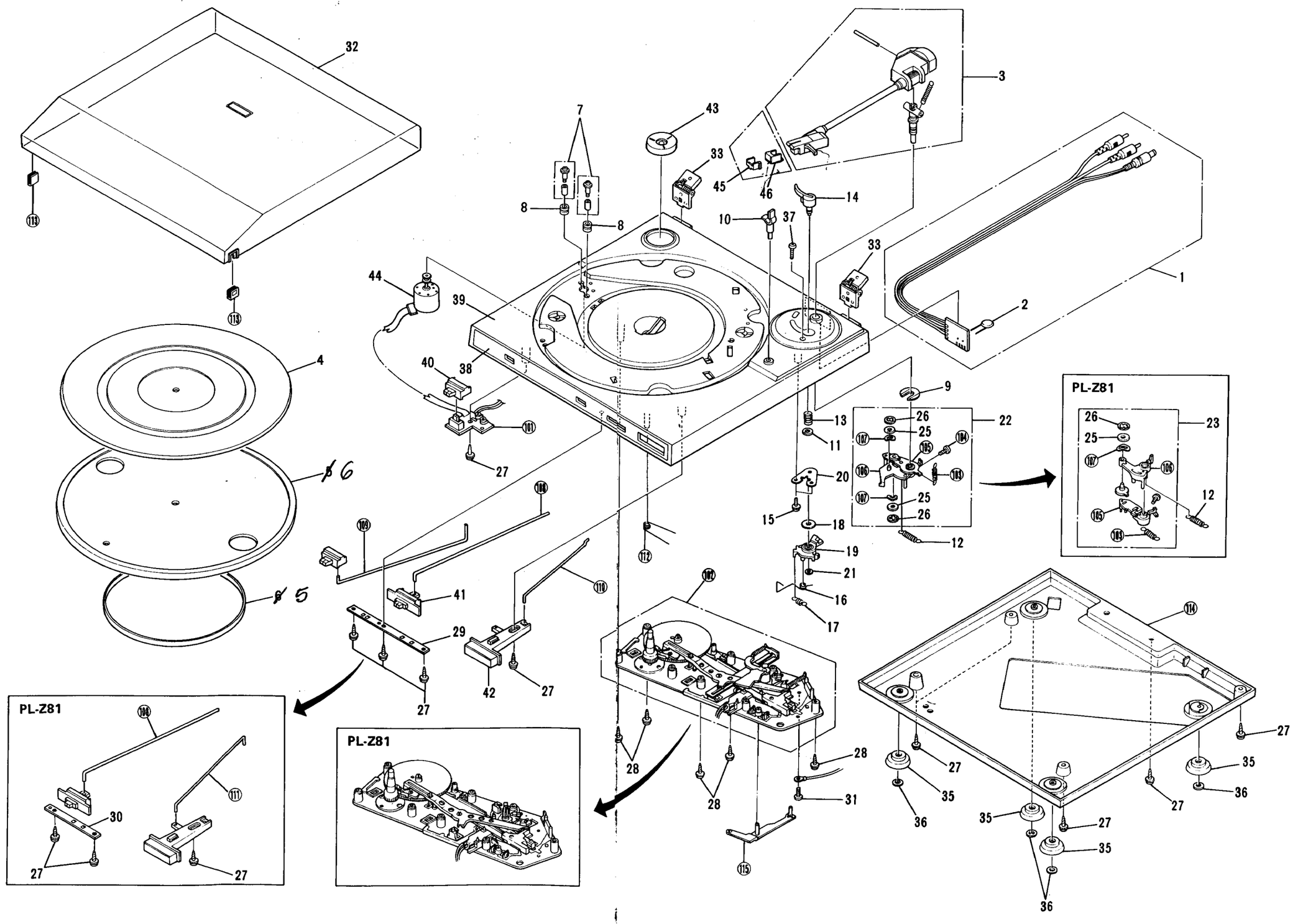
32
3
7
43
33
45
46
14
8
8
10
37
33
44
39
1
2
40
38
4
9
26
25
22
13
11
20
15
18
19
21
16
17
12
27
161
112
184
109
41
110
29
42
27
27
6
5
PL-Z81
26
25
23
12
PL-Z81
104
111
30
27
27
PL-Z81
102
28
28
28
31
115
114
27
35
36
27
35
36
35
27
35
36

5.2 SUB-PANEL ASSEMBLY (PL-Z91)

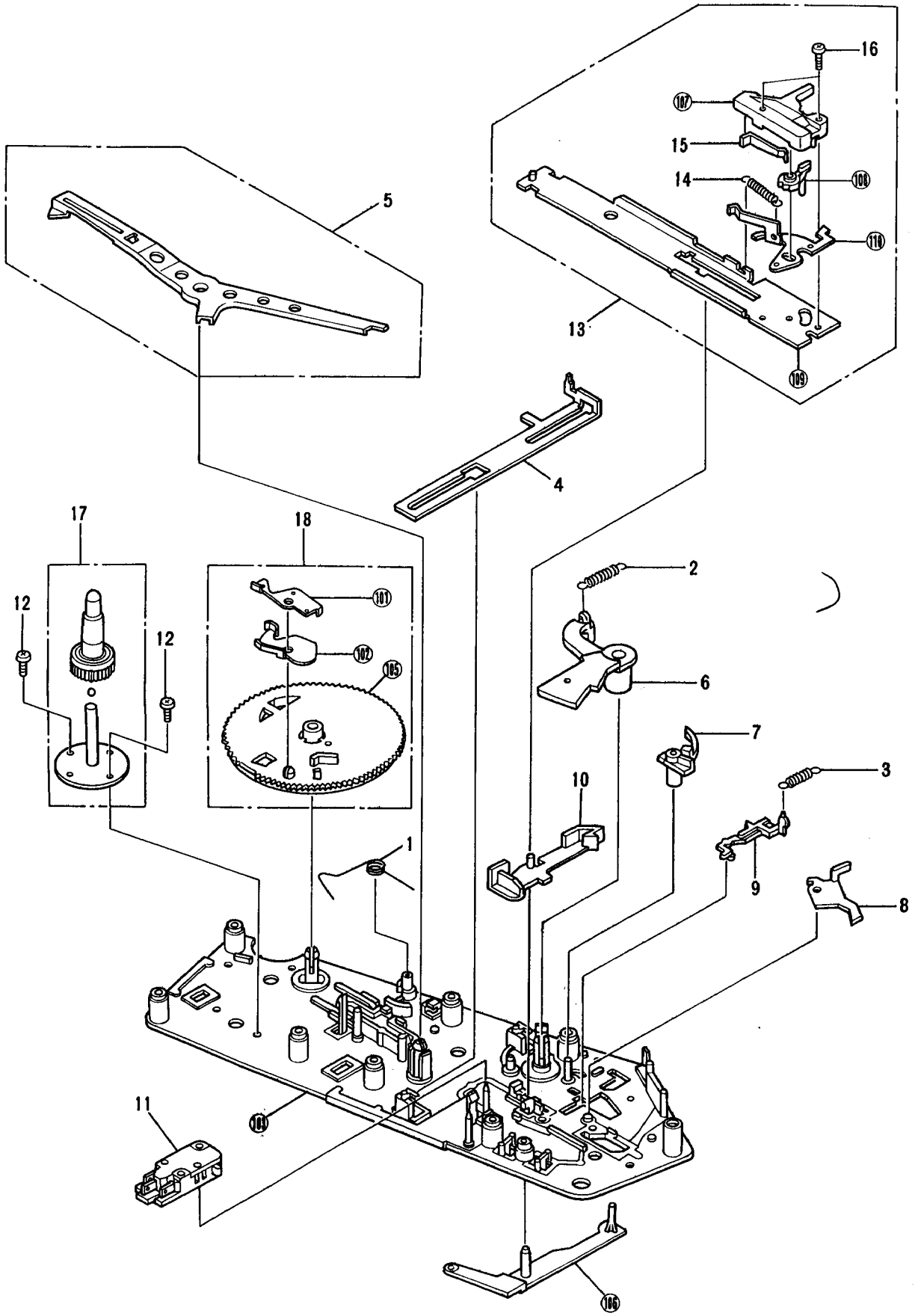

Parts List of Industrial, RH, 4WD and Fly (2D)

Item	Qty	Part No.	Description
1		1104A-44T	Engine, 4.4L T4 Stage3
	1	1104A-44T	Engine, 4.4L T4 Stage3
	1	T404BHB	Perkins 4.4L
	1	T404BHB	Perkins 4.4L
	1	T404BHB	Perkins 4.4L
	1	T404BHB	Perkins 4.4L
	1	T404BHB	Perkins 4.4L
	1	T404BHB	Perkins 4.4L
	1	T404BHB	Perkins 4.4L
2	1	T404BHB	Perkins 4.4L
3	1	1104A-44T	Engine, 4.4L T4 Stage3
4	1	RE548836	Engine, 4.4L T4 Stage3
	1	RE548836	Fan Guard
	1	RE548836	Fan Guard
	1	RE548836	Fan Guard
	1	RE548836	Fan Guard
5	1	RE548836	Fan Guard
6	1	RE548836	Fan Guard
7	1	RE548836	Fan Guard
8	1	RE548836	Fan Guard
9	1	RE548836	Fan Guard
10	1	RE548836	Fan Guard
11	1	RE548836	Fan Guard
12	1	RE548836	Fan Guard
13	1	RE548836	Fan Guard
14	1	RE548836	Fan Guard
15	1	RE548836	Fan Guard

Item	Qty	Part No.	Description
16	1	RE548836	Fan Guard
17	1	1104A-44T	Engine, 4.4L T4 Stage3
18	1	RE548836	Fan Guard
19	1	RE548836	Fan Guard
20	1	RE548836	Fan Guard
21	1	RE548836	Fan Guard
22	1	RE548836	Fan Guard
23	1	RE548836	Fan Guard
24	1	RE548836	Fan Guard
25	1	RE548836	Fan Guard
26	1	RE548836	Fan Guard
27	1	RE548836	Fan Guard
28	1	RE548836	Fan Guard
29	1	RE548836	Fan Guard
30	1	RE548836	Fan Guard
31	1	RE548836	Fan Guard
32	1	RE548836	Fan Guard
33	1	RE548836	Fan Guard
34	1	RE548836	Fan Guard
35	1	RE548836	Fan Guard

11 CHASSIS ASSEMBLY PL-LA1

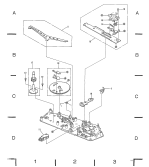

SCHEMATIC DIAGRAM

7. P.C. BOARDS CONNECTION DIAGRAM

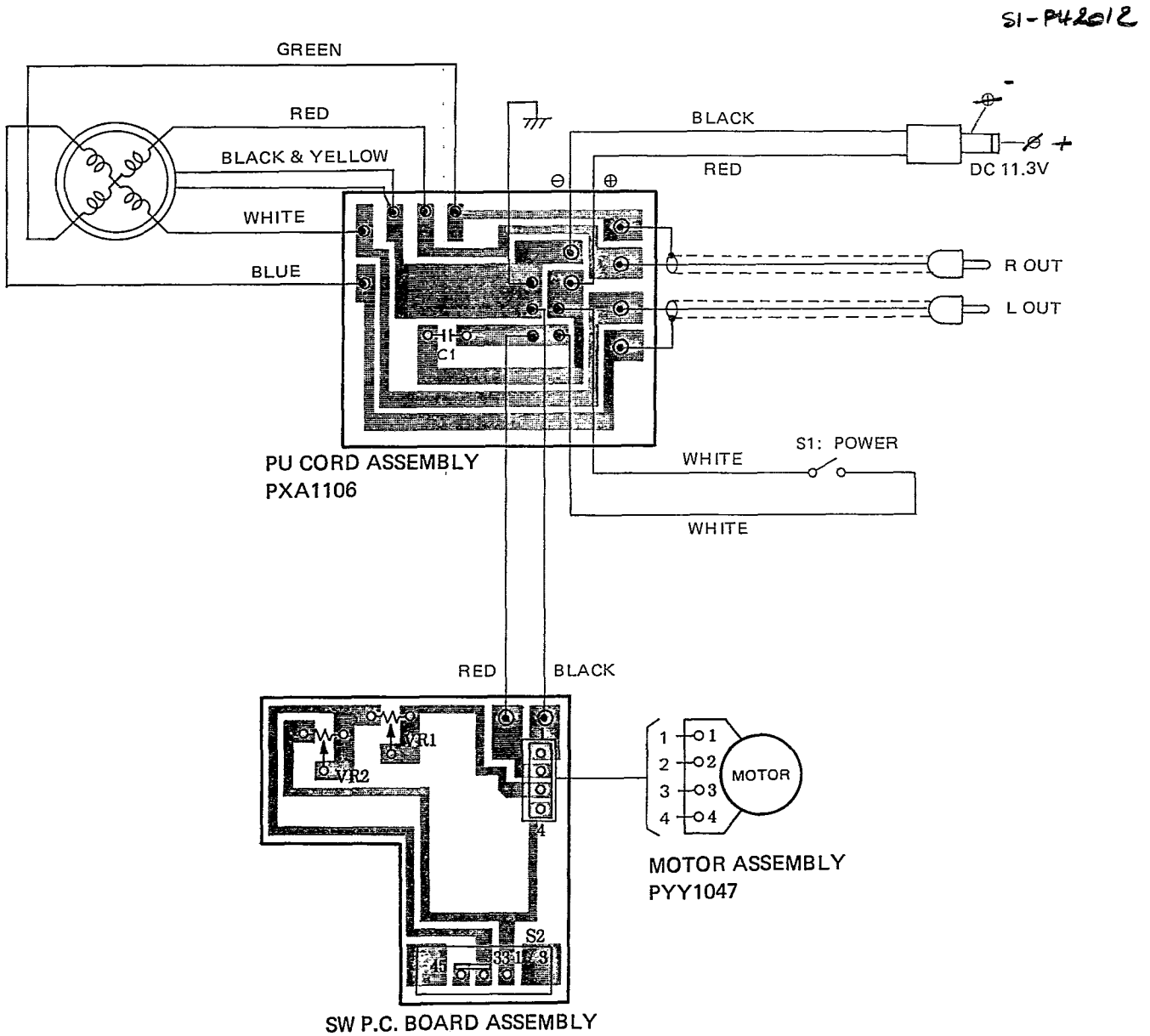

8. ELECTRICAL PARTS LIST

NOTES:

- *Parts without part number cannot be supplied.*
- *Parts marked by "◉" are not always kept in stock. Their delivery time may be longer than usual or they may be unavailable.*
- *The ⚠ mark found on some component parts indicates the importance of the safety factor of the part. Therefore, when replacing, be sure to use parts of identical designation.*
- *For your parts Stock Control, the fast moving items are indicated with the marks ★★ and ★.*
  ★★ GENERALLY MOVES FASTER THAN ★
  This classification shall be adjusted by each distributor because it depends on model number, temperature, humidity, etc.
- *When ordering resistors, first convert resistance values into code form as shown in the following examples.*

  Ex. 1 When there are 2 effective digits (any digit apart from 0), such as 560 ohm and 47k ohm (tolerance is shown by J = 5%, and K = 10%).

560Ω	*56 × 10¹*	*561*	*RD1/4PS 5 6 1 J*
47kΩ	*47 × 10³*	*473*	*RD1/4PS 4 7 3 J*
0.5Ω	*0R5*		*RN2H 0 R 5 K*
1Ω	*010*		*RS1P 0 1 0 K*

  Ex. 2 When there are 3 effective digits (such as in high precision metal film resistors).

5.62kΩ	*562 × 10¹*	*5621*	*RN1/4SR 5 6 2 1 F*

Miscellaneous Parts

Mark	Symbol & Description	Part No.
	SW P.C. board assembly	
	PU cord assembly	PXA1106
★★	Motor assembly	PYY1047

PU Cord Assembly (PXA1106)

CAPACITOR

Mark	Symbol & Description	Part No.
	C1 Ceramic capacitor	CKDYF103Z50

SW P.C. Board Assembly

SWITCH

Mark	Symbol & Description		Part No.
★★	S2	Slide switch (SPEED)	PSH1006

RESISTORS

Mark	Symbol & Description		Part No.
★	VR1, VR2	Semi-Fixed resistor	VRTB6VS472

9. PRECAUTIONS FOR REASSEMBLY

If new parts have been used, follow these directions and precautions when reassembling a unit after completing repairs. Also lubricate places requiring lubrication. Incorrect mounting of parts or neglecting lubrication may cause problems with the mechanical section. Follow the procedures properly.

9.1 PLACES THAT REQUIRE LUBRICATION

NOTE:
Types of lubricants and places where they are used are listed in table 1.

Type of Oil	Places used
Silicon Oil #500000	EV cam section
GYA-008	all other places requiring lubrication

Lubrication points are specified for greases other than GYA-008. Never use a different type of greases.

- **EV Cam Section**

Apply grease to the heart-shaped grooved section (rear side of the cam) and lock plate sliding section in order to minimize wear on the sliding section and the burden on the mechanism.

- **Driving Plate Assembly**

Decrease the burden on the mechanism and the wear on the sliding section.

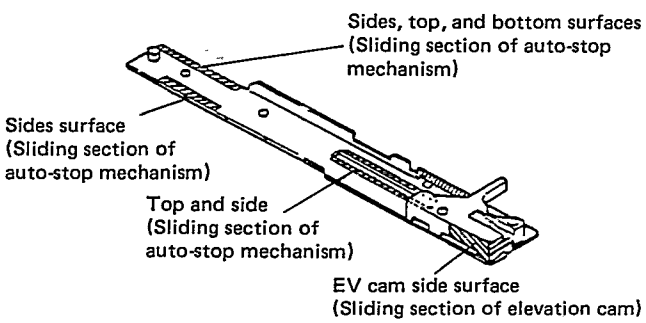

Fig. 9-1 Driving plate assembly section

- **Switch Locker Section**

Apply grease to the switch locker (hole) and sub-panel base sliding section to decrease the burden on the mechanism.

When applying grease to the hole (shaft hole), do not apply any grease 2—3mm from the button surface. If grease is applied 2—3mm within the bottom surface, it may come out the bottom and go between the switch lever and sub-panel base causing the switch lever to operate ineffectively.

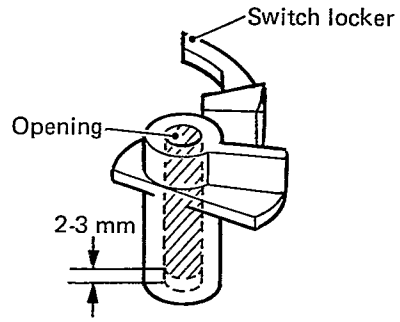

Fig. 9-2 Switch locker section

- **EV Sheet Section**

Apply grease to the elevation shaft and sliding section of the bearing.

This is to assure stability in the elevation lowering speed.

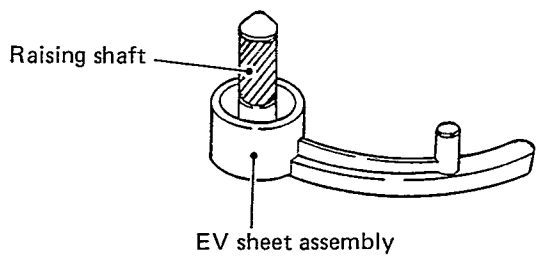

Fig. 9-3 EV sheet section

- **Elevation Cam Section**

Apply GYA-008 grease to the elevation cam and sliding section of the raising shaft to decrease the burden when operated.

Also apply silicon oil #500000 to the hole. This is to stabilize the elevation lowering speed.

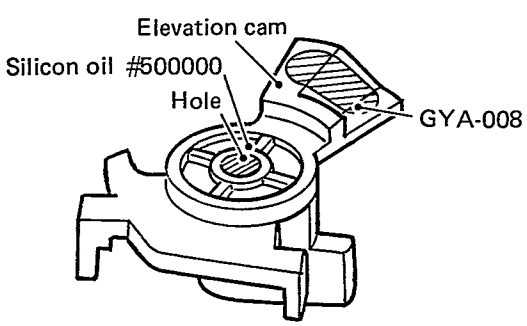

Fig. 9-4 Elevation cam section

- **Index Cam Section (PL-Z91 only)**

Apply grease to the index cam lower surface of the hooked section to decrease the burden on the mechanism.

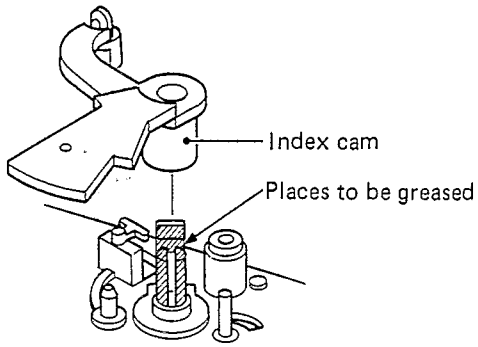

Fig. 9-5 Index cam section

- **Reset Plate Section (PL-Z91 only)**

Apply grease to the sub-panel base (shaft) and sliding section of the reset plate to decrease the burden on the mechanism.

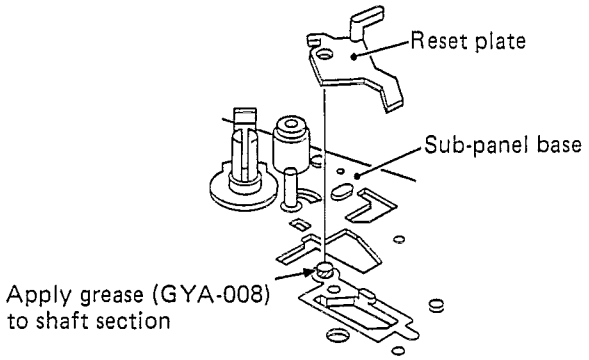

Fig. 9-6 Reset plate section

- **Other Places to be Greased (PL-Z91 only)**

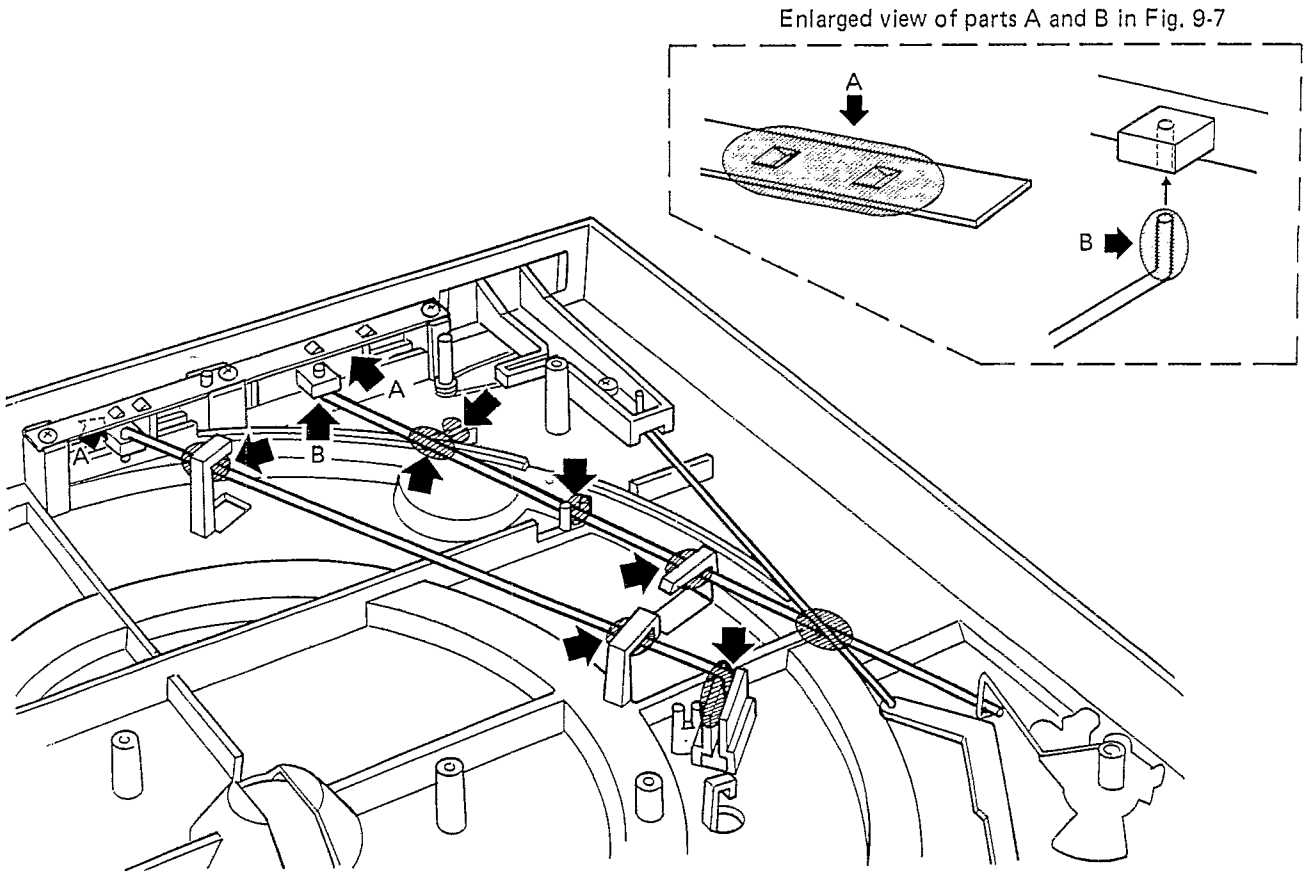

Fig. 9-7

- Other Places to be Greased (PL-Z81 only)

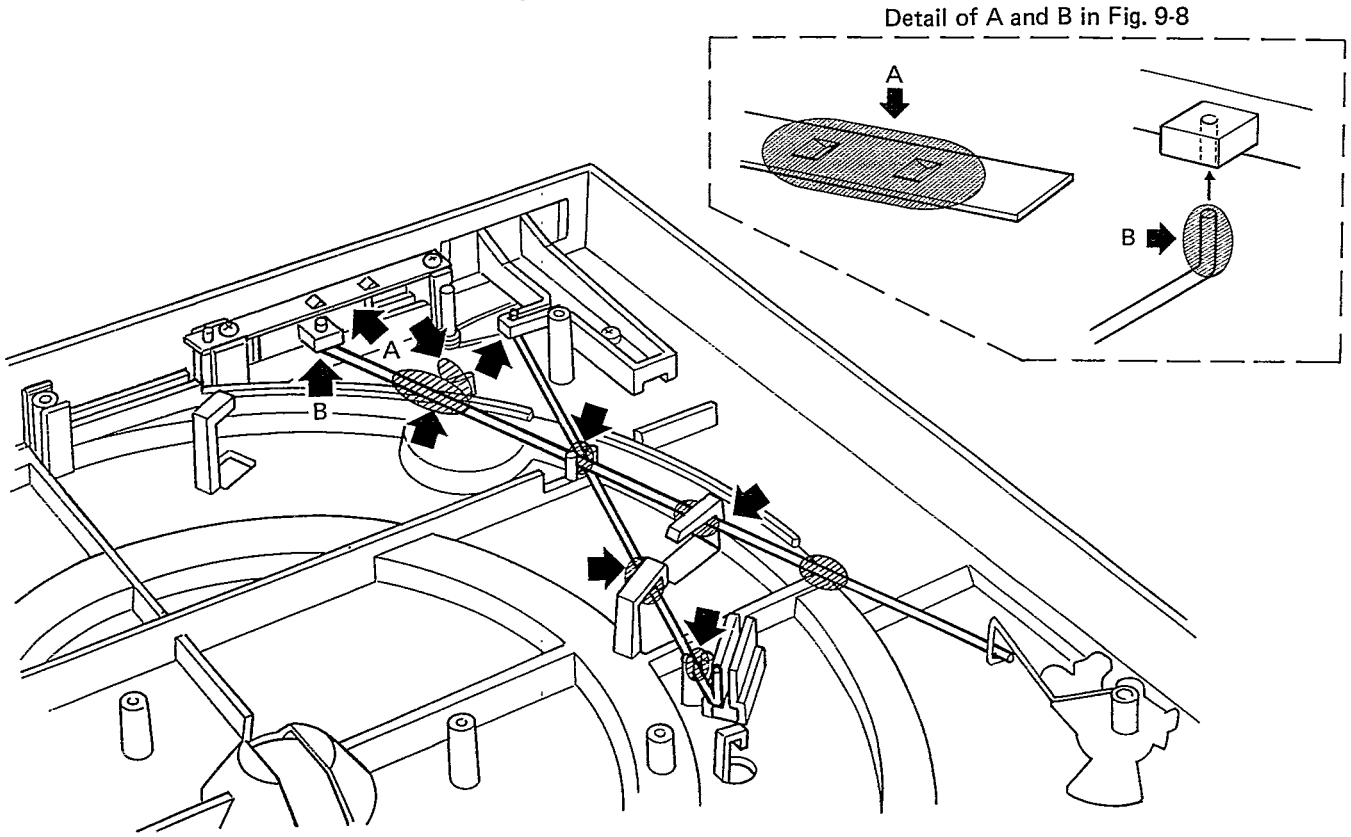

Fig. 9-8

9.2 PRECAUTIONS FOR ATTACHMENT OF PARTS AND REASSEMBLY

- Cam Assembly Attachment

The cam assembly is attached by letting the lock spring go in the direction Ⓐ as shown in Fig. 9-9.

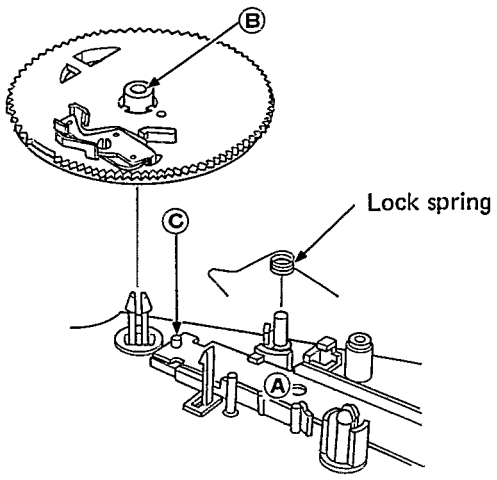

Fig. 9-9 Cam assembly attachment

- PU Plate Assembly Attachment

The PU plate assembly is attached with screw Ⓑ by pushing the PU plate bearing section against the arm rotating shaft fixing nut.

The attachment direction is matched to the center of the support line as shown in Fig. 9-10. (position the tonearm above the arm rest).

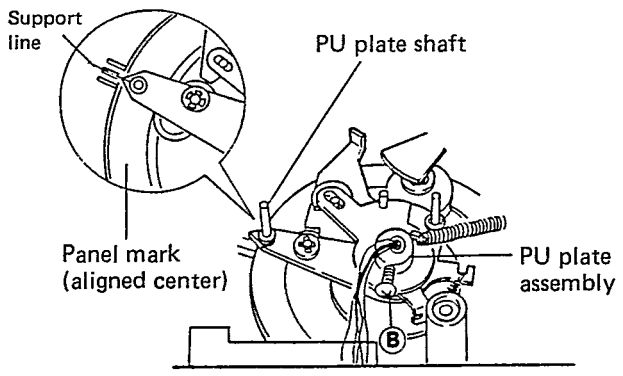

Fig. 9-10 PU plate attachment

- **Arm Base Attachment**

When mounting the subpanel assembly to the unit (panel), set the position of the switch locker in the subpanel assembly and the switch lever so that the microswitch (S1: for power on/off) is in the OFF position. Also set the tonearm above the arm rest. Set the arm elevator to UP. Then when the subpanel is mounted, mount the PU plate shaft in the position shown in Fig. 9-11.

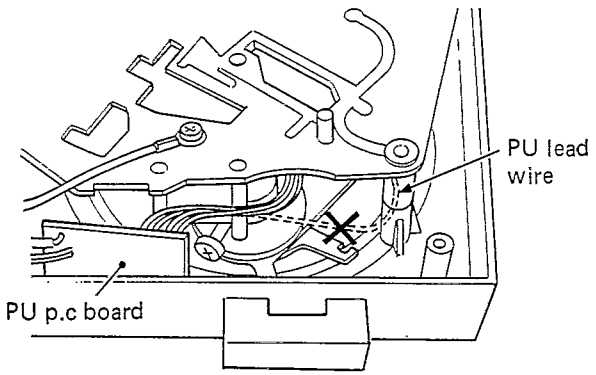

Fig. 9-11 Arm base attachment

3. MICROSWITCH LEAD WIRE STYLING CONFIRMATION (PL-Z91 only)

When attaching the mechanism assembly to the panel, be careful that the lead wires do not contact the select lever as shown in Fig. 9-12. If the lead wires contact the select lever, record size detection will malfunction.

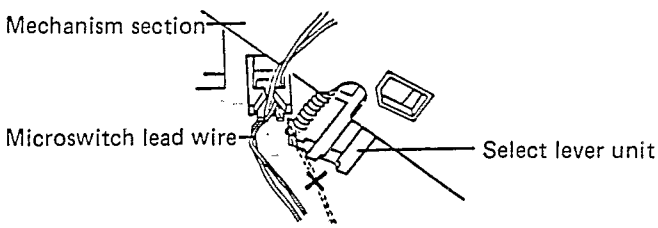

Fig. 9-12 Microswitch lead wire attachment

- **Start Lever Unit Attachment (PL-Z91 only)**

Attach the shaft section of the start lever unit as shown in Fig. 9-13 so that it comes between the reset plate and start plate.

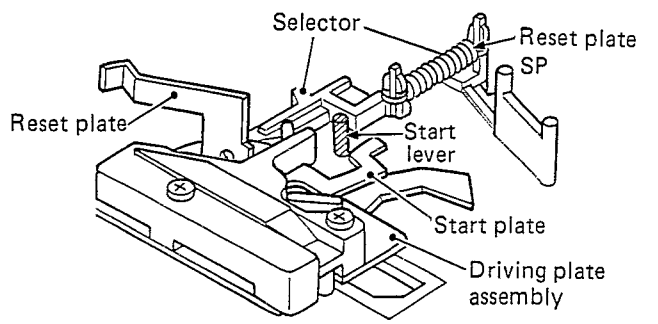

Fig. 9-13 Start lever unit attachment

- **Spindle Assembly Attachment (PL-Z91 only)**

When installing the spindle assembly, set the cam in the mechanism stop location and verify that the starting plate section (B) does not protrude beyond surface (A) of the cam. If the spindle assembly is attached with the starting plate section (B) protruding, the starting plate may be deformed, the spindle assembly pinion gear may be scratched, and the return function may be come disabled.

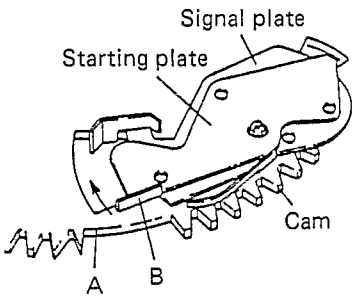

Fig. 9-14 Spindle assembly attachment

- **Installing the Cords (PL-Z91 only)**

For the styling of the PU cord assembly and other lead wiring, refer to Fig. 9-15.

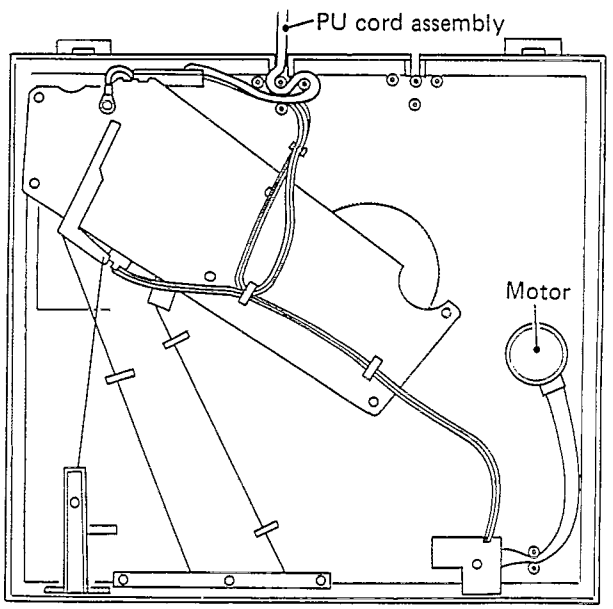

Fig. 9-15 Cords stringing

10. ADJUSTMENTS

10.1 MOTOR ADJUSTMENTS

Place the record player on blocks as shown in Fig. 10-1 and adjust the motor from the under base.

1. Turn the arm elevation lever up to raise the arm.
2. Place a strobo sheet on the turntable, move the arm to the turntable side, and rotate the turntable.
3. Adjust semifixed resistors VR1 and VR2 of the motor assembly so the 33-1/3 rpm and 45 rpm strobo of the strobo sheet appears to the static.
4. First adjust VR1 for 45 rpm and then the adjust VR2 for 33-1/3 rpm.

10.2 STYLUS LANDING POSITION ADJUSTMENT (PL-Z91 only)

When the tonearm doesn't land in the correct position during automatic playback, adjust according to the following procedure.

1. Place a 30cm record on the platter.
2. Press the START/STOP switch and start automatic playback. Note the landing position of the stylus. (How many mm to the inside or outside compared to the proper landing position on the platter.)
3. Depress the START/STOP switch to return the tonearm to the tonearm rest.
4. Press the arm elevation switch to raise the stylus.
5. With the adjustment hole visible, move the tonearm to the edge of the record by hand.
6. Turn the adjustment screw with a small screwdriver according to step 2 as follows:
   - When the stylus lands at the outside of the record, turn the adjustment screw clockwise.
   - When the stylus lands on the proper position toward the record center, turn the adjustment screw counterclockwise. One half turn of the adjustment screws moves the tonearm about 12mm.
7. After adjustment, press the START/STOP switch and check if the stylus landing point was correctly adjusted.
   If adjustment is incorrect, repeat steps 3 to 6.

Be careful not to damage the record and stylus when making this adjustment.

ADJUSTMENT USING A TEST RECORD

(Landing position adjustment cannot be done when the tonearm is on the record.)

30cm landing point ..... Lands between count 306 and 313.

17cm landing point ..... Lands between count 175 and 183.

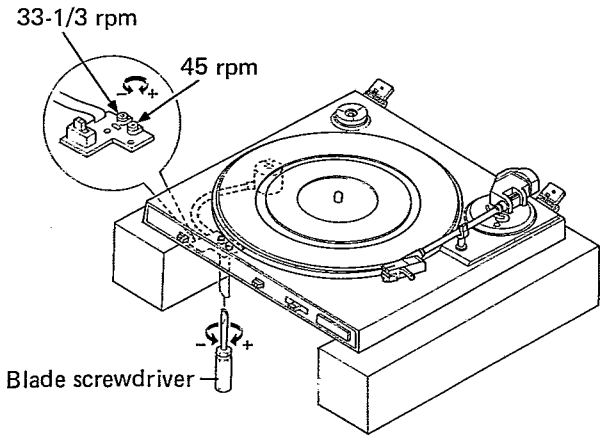

Fig. 10-1 Motor adjustment

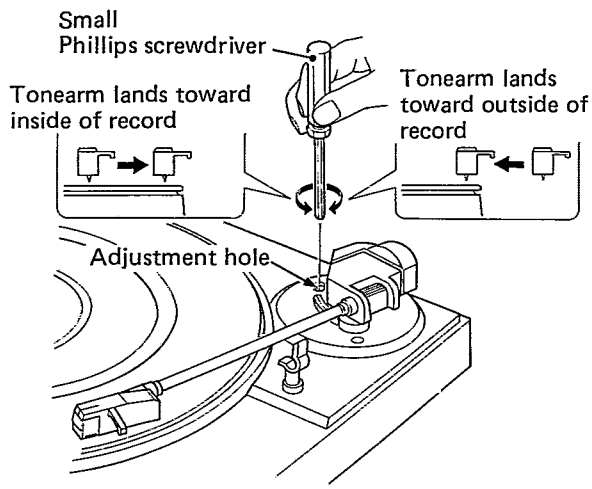

Fig. 10-2 Stylus landing point adjustment

10.3 AUTO-RETURN POSITION ADJUSTMENT

When the auto-return position is too near or too far, make the following adjustments.

1. Check the stylus landing position. If the stylus does not land at the correct position, adjust the landing position.
2. Set the arm elevation switch to UP and turn the auto-return adjustment screw fully counter-clockwise.
3. Move the tonearm as far as it will go toward the center.
4. When the auto-return adjustment screws is turned slowly clockwise, the tonearm will begin to move toward the center.
5. Stop turning the adjustment screw at the point at which there is a space of 32mm between the stylus of the cartridge and the center shaft. (Fig. 10-3)
6. After adjustment, check that auto-return is performed correctly and that the stylus landing position is correct.

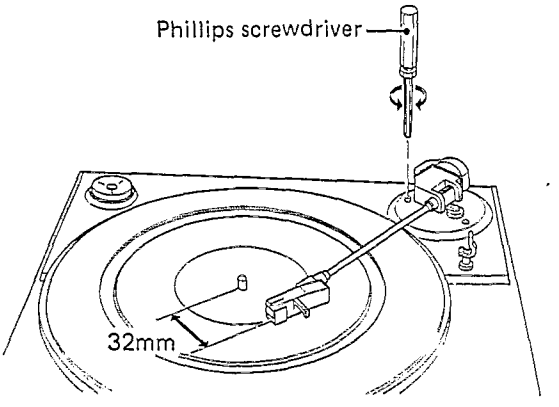

Fig. 10-3 Auto-return position adjustment

10.4 ARM ELEVATION HEIGHT ADJUSTMENT

1. Press the arm elevation switch to move the arm up.
2. Turn the height adjustment screw on the side of the arm elevation unit with a Phillips screwdriver so that the distance between the record and the stylus is 7±2mm. The arm moves up when the screw is turned counterclockwise.

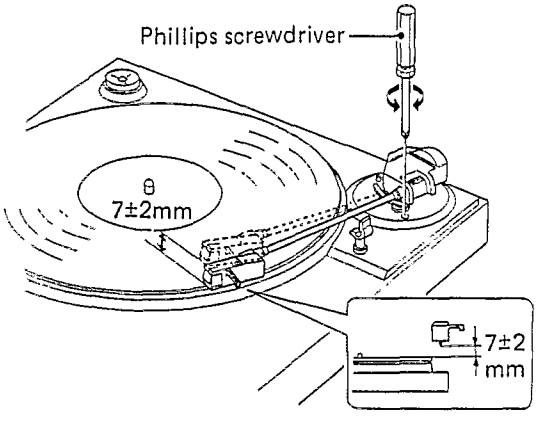

Fig. 10-4 Arm elevation adjustment

10. RÉGLAGES

10.1 REGLAGE DU MOTEUR

Placer le tourne-disque sur des blocs, comme est montré dans la Fig. 10-1 et régler le moteur depuis le dessous.

1. Tourner le levier de relevage du bras pour soulever le bras de lecture.
2. Placer une feuille stroboscopiques sur le tourne-disques; déplacer le bras jusqu'au côté du tourne-disque et le faire tourner.
3. Régler les résistances demi-fixes VR1 et VR2 de l'ensemble du moteur, jusqu'à ce que la feuille stroboscopique apparaisse immobile en 33-1/3 et 45 tr/min.
4. D'abord régler VR1 pour avoir la vitesse de 45 tr/min, ensuite, régler VR2 pour 33-1/3 tr/min.

10.2 REGLAGE DE LA POSITION DE DESCENTE DE LA POINTE DE LECTURE (PL-Z91 uniquement)

Lorsque le bras de lecture ne descend pas sur la position correcte lors de la lecture automatique, réaliser le réglage en suivant la procédure suivante.

1. Placer un disque de 30 cm sur le plateau.
2. Appuyer sur la touche de marche/arrêt (START/STOP) et faire débuter la lecture automatique. Noter l'endroit du point de descente. (Nombre de mm vers l'intérieur ou vers l'extérieur par rapport au point de descente normal.)
3. Appuyer sur la touche START/STOP pour faire retourner le bras de lecture sur son support.
4. Appuyer sur la touche de relevage du bras pour soulever la pointe de lecture.
5. En ayant l'orifice de réglage visible, déplacer à la main le bras de lecture vers la périphérie du disque.
6. Tourner la vis de réglage à l'aide d'un petit tournevis, en fonction du point 2, comme suit:
   - Lorsque la pointe de lecture descend vers l'extérieur du disque, tourner la vis de réglage dans le sens des aiguilles d'une montre.
   - Lorsque la pointe de lecture descend vers l'intérieur du disque, tourner la vis de réglage dans le sens contraire des aiguilles d'une montre.

     Un demi-tour de la vis de réglage correspond à un déplacement d'environ 12mm du bras de lecture.
7. Après le réglage, appuyer sur la touche START/STOP et vérifier si le réglage de la position de descente a été correctement effectué.
   Si le réglage n'est pas correct, répéter les étapes 3 à 6.

Prendre soin de ne pas endommager le disque ni la pointe de lecture en réalisant ce réglage.

REGLAGE AU MOYEN D'UN DISQUE D'ESSAI

(Le réglage du point de descente ne peut être réalisé lorsque le bras de lecture est sur le disque.)

Point de descente
pour 30cm ..... Descente entre les valeurs 306 et 313.

Point de descente
pour 17cm ..... Descente entre les valeurs 175 et 183.

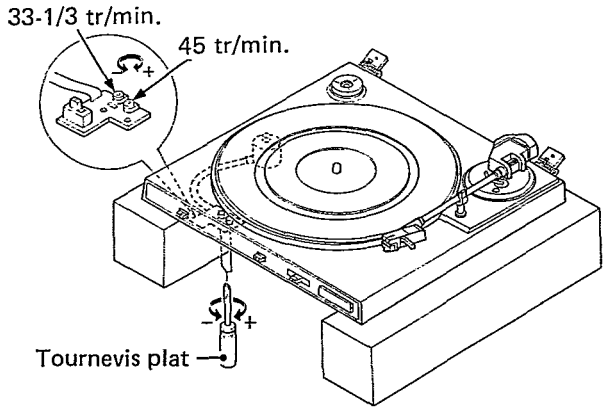

Fig. 10-1 Réglage du moteur

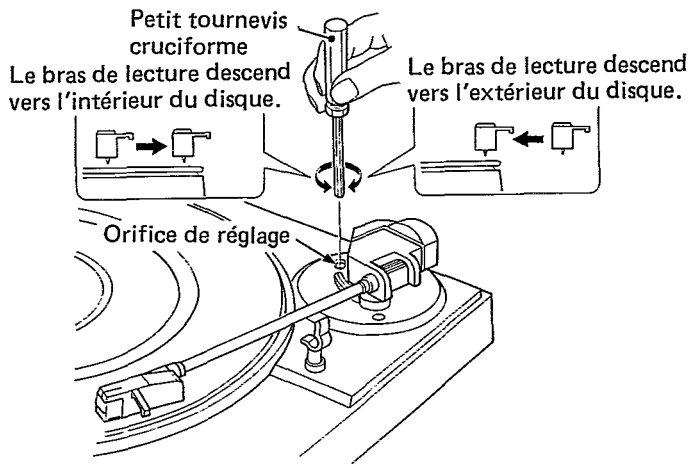
Petit tournevis cruciforme
Le bras de lecture descend vers l'intérieur du disque.
Le bras de lecture descend vers l'extérieur du disque.
Orifice de réglage

Fig. 10-2 Réglage du point de descente de la pointe de lecture

10.3 REGLAGE DE LA POSITION DE RETOUR AUTOMATIQUE

Réaliser les réglages suivants lorsque la position de retour automatique se produit trop près ou loin.

1. Contrôler la position de descente de la pointe de lecture. Si la pointe de lecture ne descend pas sur la position correcte, ajuster la position de descente.
2. Régler la touche de relevage du bras sur la position "UP" et tourner la vis de réglage du retour automatique à fond dans le sens contraire des aiguilles d'une montre.
3. Déplacer le bras de lecture le plus possible vers l'intérieur.
4. Lorsque la vis de réglage du retour automatique est tournée lentement dans le sens des aiguilles d'une montre, le bras de lecture commence à se déplacer vers le centre.
5. Arrêter de tourner la vis de réglage sur le point pour lequel il y a un écart de 32mm entre la pointe de lecture et l'axe central. (Fig. 10-3)
6. Après le réglage, vérifier que le retour automatique se réalise correctement et que la position de descente de la pointe est correcte.

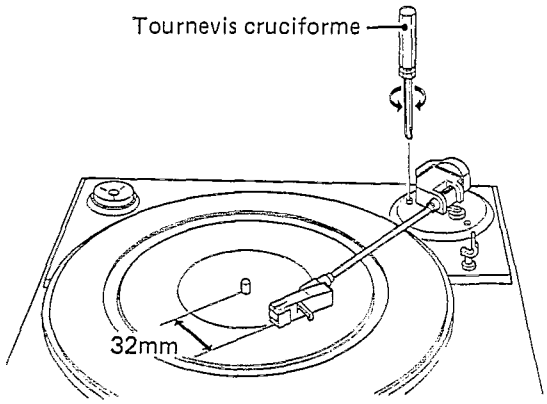

Fig. 10-3 Réglage de retour automatique

10.4 REGLAGE DE L'ELEVATION DU BRAS

1. Appuyer sur le commutateur d'élévation du bras pour déplacer le bras vers le haut.
2. Tourner la vis du côté du bloc d'élévation du bras au moyen d'un tournevis cruciforme, de telle sorte que la distance entre le disque et la pointe de lecture soit de 7±2mm. Le bras se déplace vers le haut lorsque l'on tourne la vis dans le sens contraire des aiguilles d'une montre.

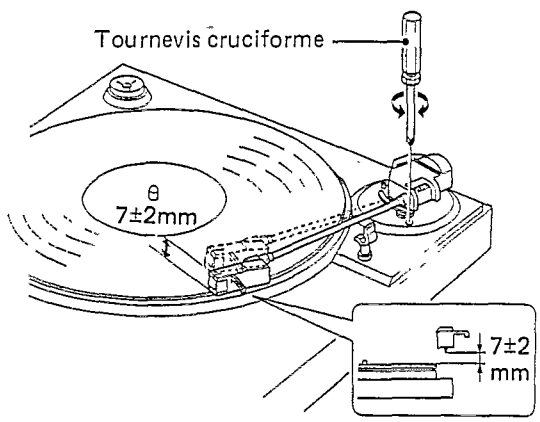

Fig. 10-4 Réglage de l'élévation du bras

10.3 AJUSTE DE RETORNO AUTOMATICO

Cuando la posición de retorno automático esté demasiado cerca o demasiado lejos, efectuar los ajustes siguientes.

1. Comprobar la posición de descenso de la aguja. Si la aguja no desciende en la posición correcta, ajustar la posición de descenso.
2. Ajustar el interruptor de elevación del brazo en la posición UP y girar el tornillo de ajuste de retorno automático completamente hacia la izquierda.
3. Desplazar el brazo fonocaptor hacia el centro.
4. Cuando se giran lentamente los tornillos de ajuste de retorno automático hacia la derecha, el brazo fonocaptor emplezará a moverse hacia el centro.
5. Dejar de girar el tornillo de ajuste en el punto en el que haya un espacio de 32mm entre la aguja de la cápsula y el eje central. (Fig. 10-3)
6. Después del ajuste, compronar que la operación de retorno automático se efectúe correctamente y que la posición de descenso de la aguja sea la correcta.

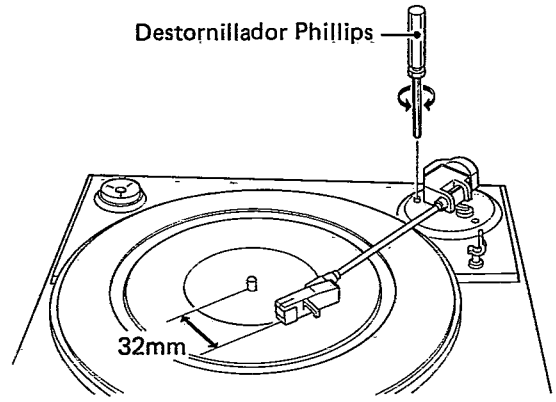

Fig. 10-3 Ajuste de retorno automático

10-4 AJUSTE DEL BRAZO DE FONOCAPTOR

1. Presionar el conmutador de elevación del brazo de fonocaptor para desplazar el brazo hacia arriba.
2. Girar el tornillo de ajuste en el lado de la unidad de elevación del brazo por medio de un destornillador Phillips, de modo que la distancia entre el disco y la aguja sea de 7±2mm. El brazo se desplaza hacia arriba girando el tornillo en sentido contrario al de las agujas del reloj.

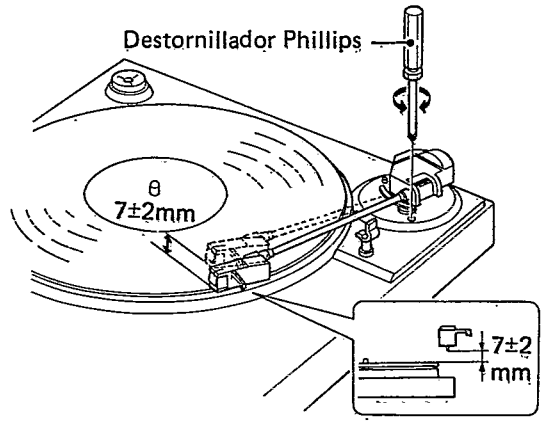

Fig. 10-4 Ajuste del brazo de fonocaptor